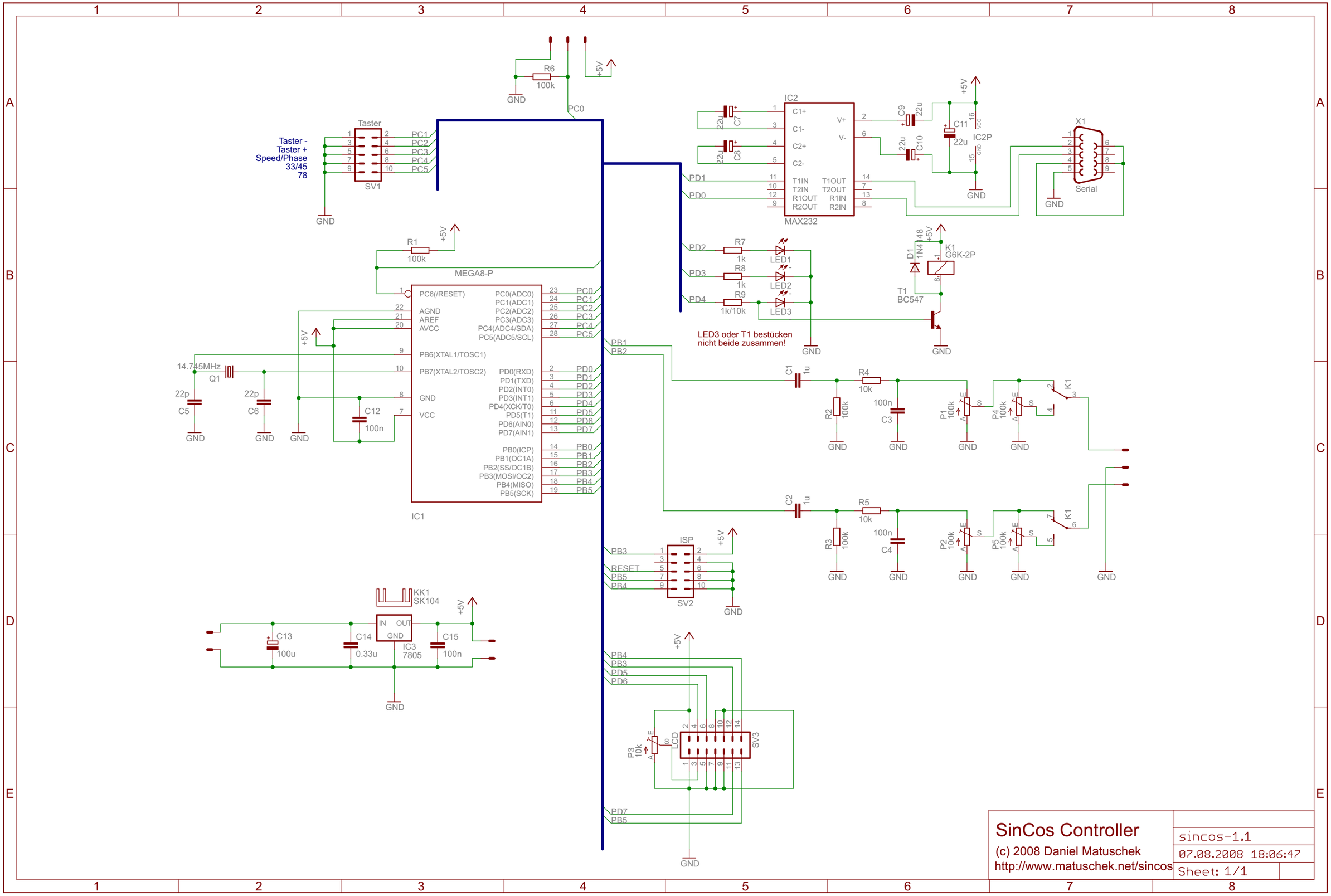
Taster
Taster -
Taster +
Speed/Phase
33/45
78
SV1
PC1
PC2
PC3
PC4
PC5
PC0
R6
100k
GND
+5V
R1
100k
MEGA8-P
PC6(/RESET)
AGND
AREF
AVCC
PB6(XTAL1/TOSC1)
PB7(XTAL2/TOSC2)
GND
VCC
PC0(ADC0)
PC1(ADC1)
PC2(ADC2)
PC3(ADC3)
PC4(ADC4/SDA)
PC5(ADC5/SCL)
PD0(RXD)
PD1(TXD)
PD2(INT0)
PD3(INT1)
PD4(XCK/T0)
PD5(T1)
PD6(AIN0)
PD7(AIN1)
PB0(ICP)
PB1(OC1A)
PB2(SS/OC1B)
PB3(MOSI/OC2)
PB4(MISO)
PB5(SCK)
IC1
14.745MHz
Q1
22p
C5
C6
C12
100n
IC2
MAX232
C1+
C1-
C2+
C2-
T1IN
T2IN
R1OUT
R2OUT
V+
V-
T1OUT
T2OUT
R1IN
R2IN
C7
C8
C9
C10
C11
22u
IC2P
VCC
GND
X1
Serial
PD1
PD0
PD2
PD3
PD4
R7
1k
R8
1k
R9
1k/10k
LED1
LED2
LED3
LED3 oder T1 bestücken
nicht beide zusammen!
D1
1N4148
K1
G6K-2P
T1
BC547
C1
1u
R4
10k
R2
100k
100n
C3
P1
100k
P4
100k
C2
1u
R5
10k
R3
100k
C4
P2
100k
P5
100k
PB1
PB2
PB3
RESET
PB5
PB4
ISP
SV2
KK1
SK104
IN
OUT
GND
C13
100u
C14
0.33u
IC3
7805
C15
100n
PD5
PD6
PD7
P3
10k
LCD
SV3
SinCos Controller
(c) 2008 Daniel Matuschek
http://www.matuschek.net/sincos
sincos-1.1
07.08.2008 18:06:47
Sheet: 1/1