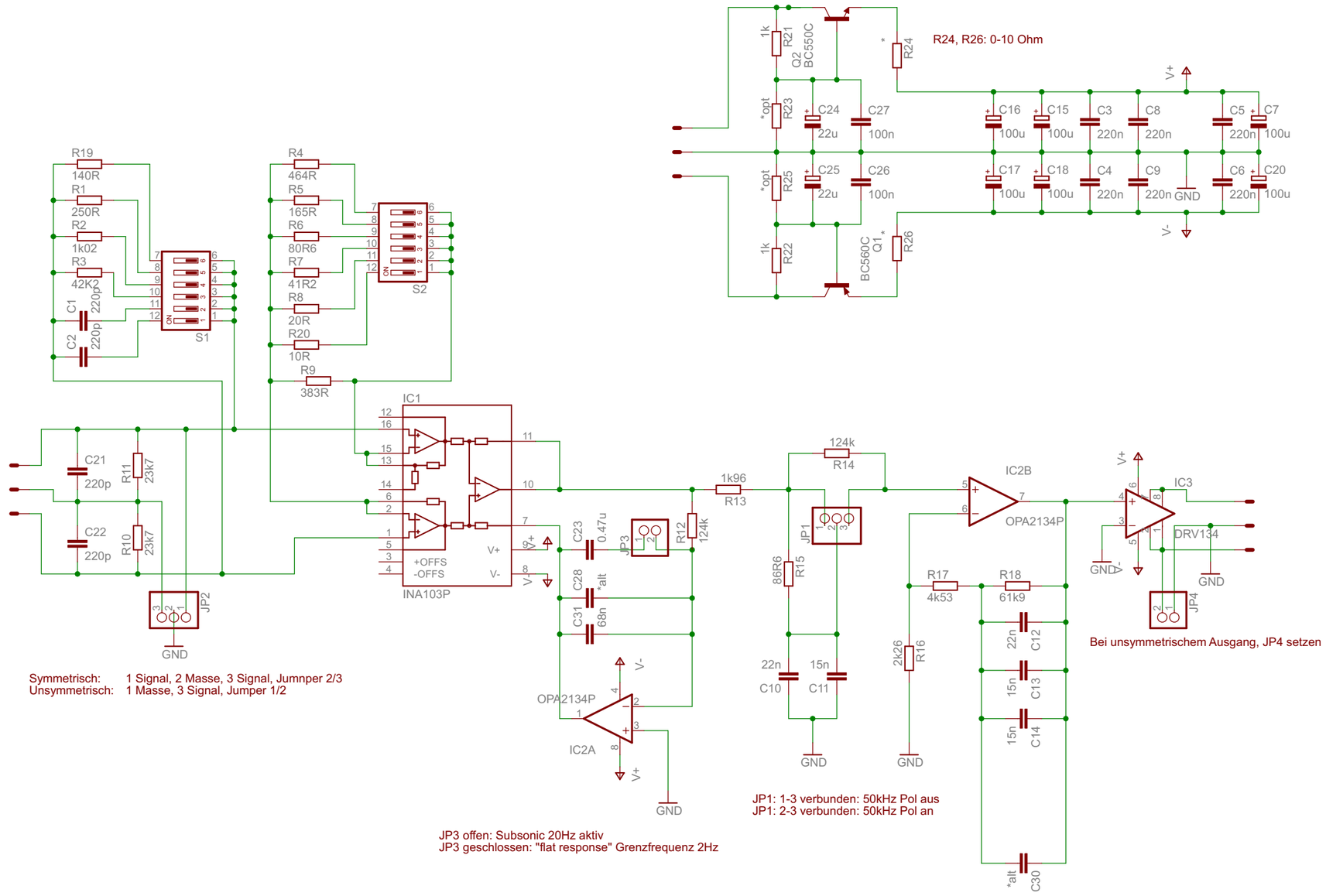

platINA

http://www.matuschek.net

platina-v1.0

23.08.2008 21:51:58

Sheet: 1/1